Current part is item (5) on diagram. Available at www.oshkoshequipment.com

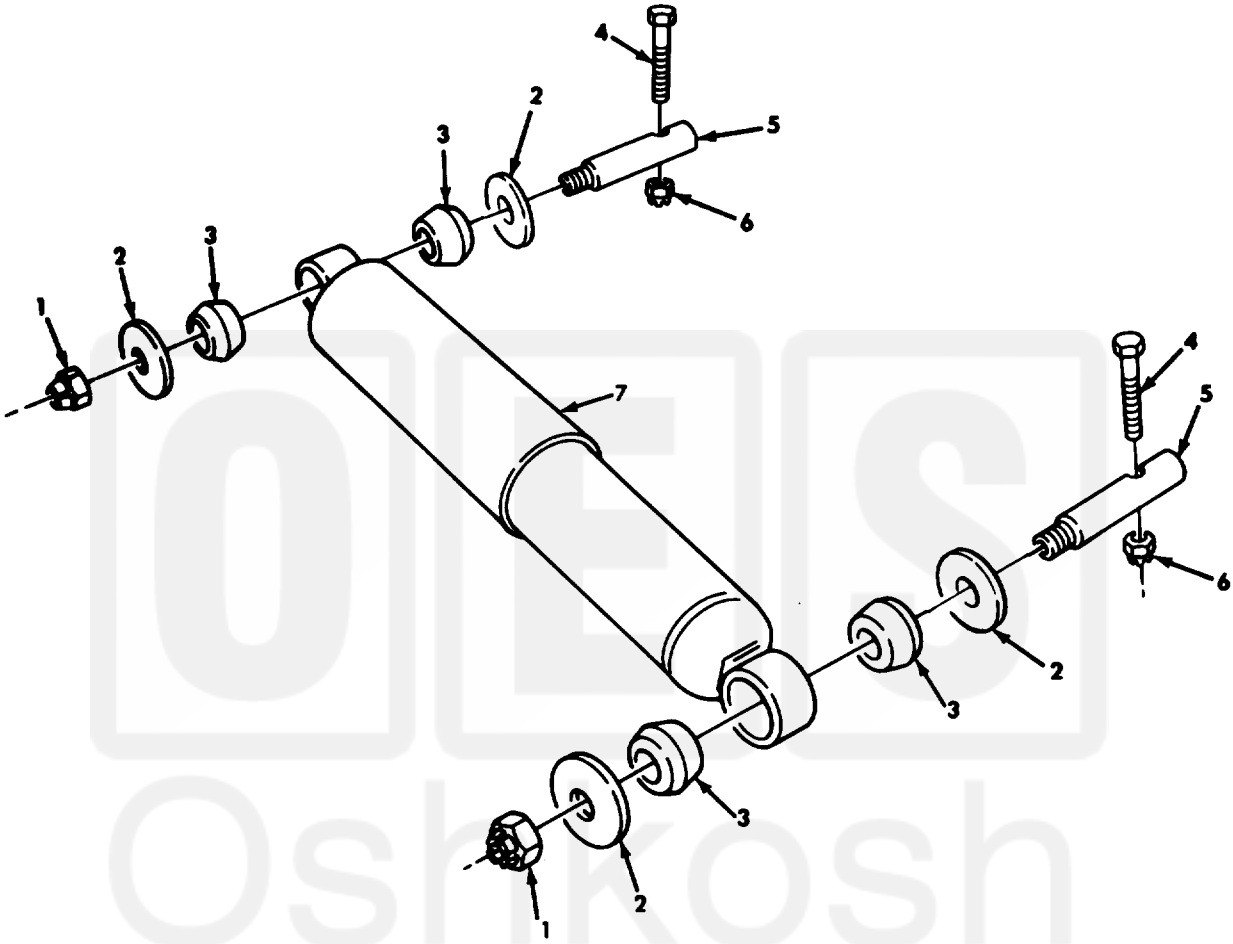

Figure 254. Shock Absorber and Mounting Hardware.

Current part is item (5) on diagram. Available at www.oshkoshequipment.com

Current part is item (5) on diagram. Available at www.oshkoshequipment.com

(1) ITEM NO	(2) SMR CODE	(3) CAGEC	(4) PART NUMBER	(5) DESCRIPTION AND USABLE ON CODES(UOC)	(6) QTY
				GROUP 1604 SHOCK ABSORBER EQUIPMENT	
				FIG.254 SHOCK ABSORBER AND MOUNTING HARDWARE	
1	PAOZZ	96906	MS51922-61	NUT,SELF-LOCKING,HE	4
2	PAOZZ	96906	MS27183-24	WASHER,FLAT	4
3	PAOZZ	19207	7409618	BUSHING,NONMETALLIC	8
4	PAOZZ	96906	MS90726-117	SCREW,CAP,HEXAGON H	4
5	PAOZZ	19207	7409619	PIN,SHOULDER,HEADLE	4
6	PAOZZ	96906	MS21045-8	NUT,SELF-LOCKING,HE	4
7	PAOZZ	19207	7409617	SHOCK ABSORBER,DIRE	2
				END OF FIGURE	

Current part is item (5) on diagram. Available at www.oshkoshequipment.com